2" J Hook Retaining Clip

PACKAGE:
100pcs Retaining Clips packed in one PE self-sealing bag and 20bags in one carton.

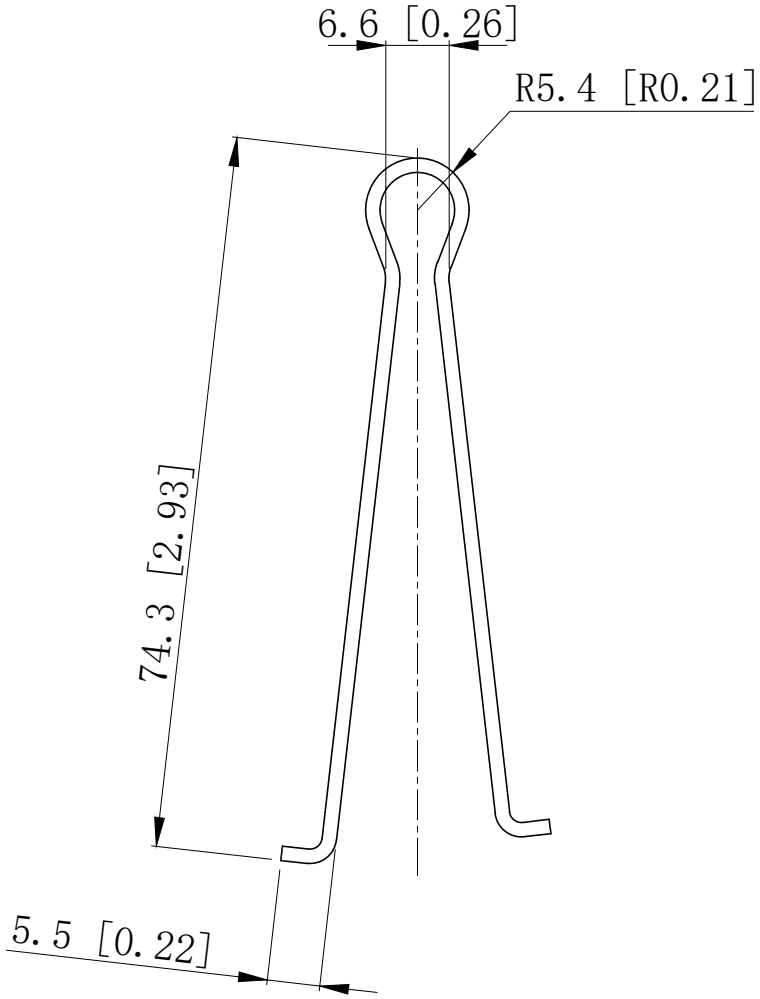

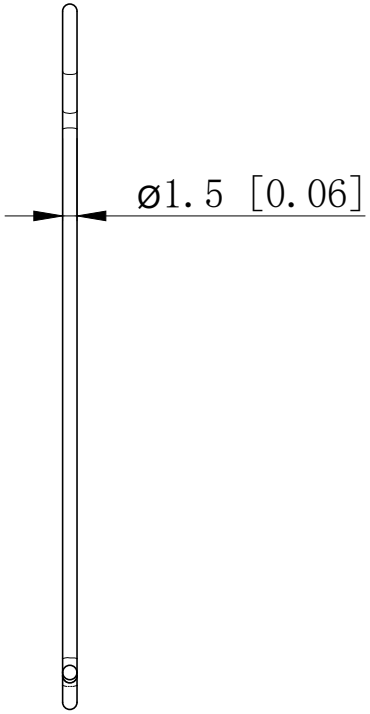

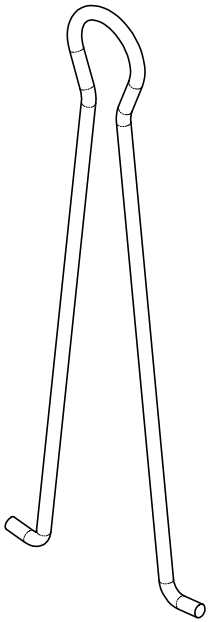

NOTES:
1.All dimensions in millimeters and [inches].

2.Free of sharp edge and burrs.max burr 0.127[0.005].

3.Material: Galvanized steel wire , Thickness: Ø1.50mm [0.059] .

TOLERANCES UNLESS OTHERWISE SPECIFIED			NAME	DATE
INCHES ANGULAR: X. X: ±0.1 X. X X: ±0.05 X. X X X: ±0.008	MILLIMETER ANGULAR: X: ±2.54 X. X: ±1.27 X. X X: ±0.203	DRAMN	YUAN	2022.8.17
		CHECKED		
		APPROVED (A)		
MATERIAL: Galvanized steel wire		APPROVED (Customer)		

THIRD ANGLE PROJECTION	FINISH	CADDY	ORBIT	RACO
	NO OIL	–	–	–

BESTLINK NETWARE

TITLE

SIZE	DWG NO.	REV
A4	104242	

SCALE: 1:1	PRINT DATE	REFERENCES	SHEET 1 OF 1