NOTE: CARTON MATERIAL MUST BE A=A

REVISION INFORMATION			
Rev.	Rev. Date	Modified By	Brief Description

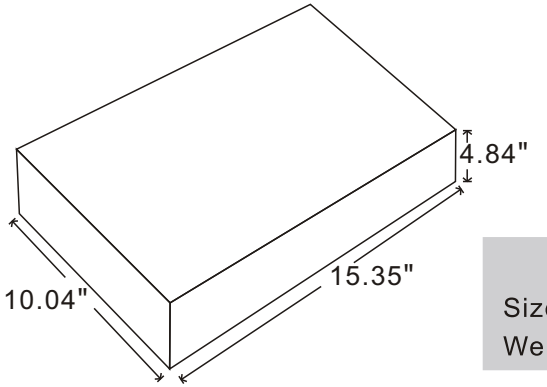

Unit package
Size: 15.35"(L)* 10.04"(W)* 4.84"(H)
Weight: 7.04LBS

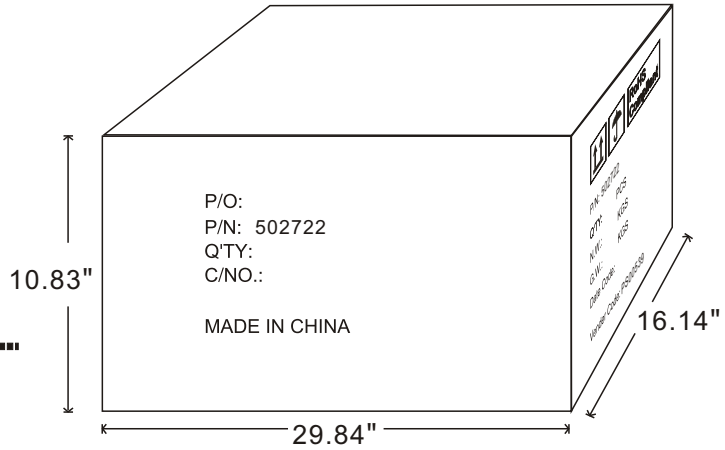

RoHS Compliant

P/N: 502722
Q'TY: PCS
N.W.: KGS
G.W.: KGS
Date Code:

Vender Code: PS00539

P/O:
P/N: 502722
Q'TY:
C/NO.:

MADE IN CHINA

Carton Size: 29.84"(L)* 16.14"(W)*10.83"(H)
Carton Quantity: 6pcs
Carton Weight: 45.76LBS

BestLinkNetware

DRAWN BY	DATE: 2015/9/16	DESCRIPTION: LCD VESA Desk Mount for most 13"-27" LCD monitors and screens,LDT09-C012, black
CHECKED BY	SHEET 1 of 1	ITEM NO. 502722
APPROVED BY	SCALE 1:1	REV. 00 / UNIT: mm